629028

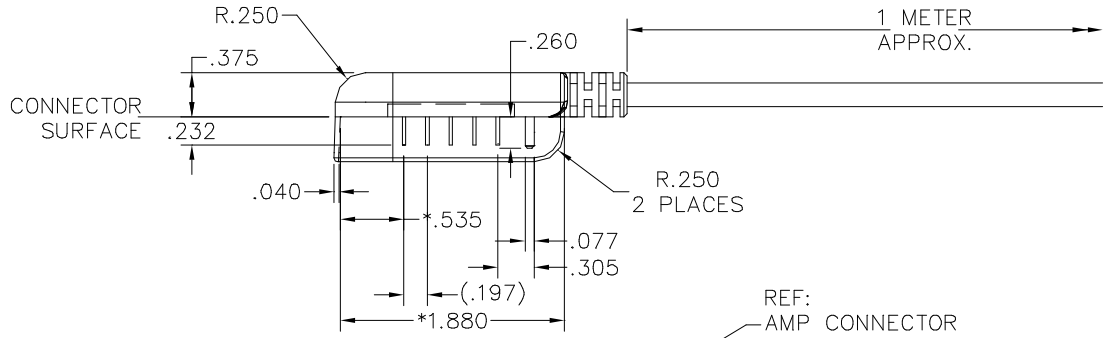

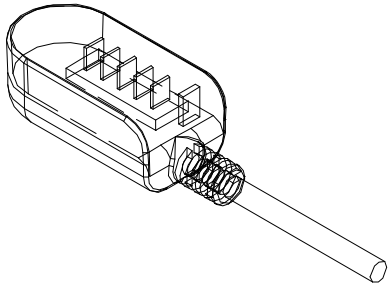

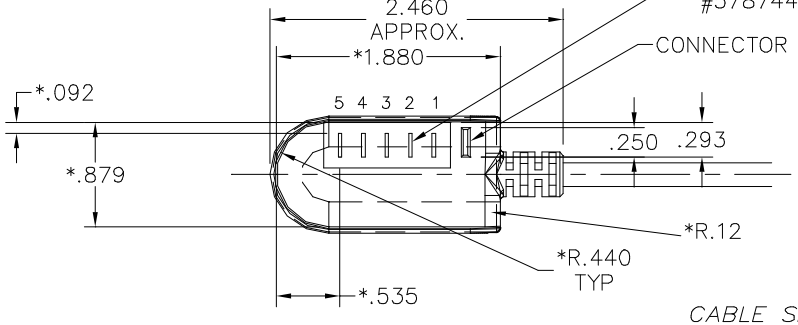

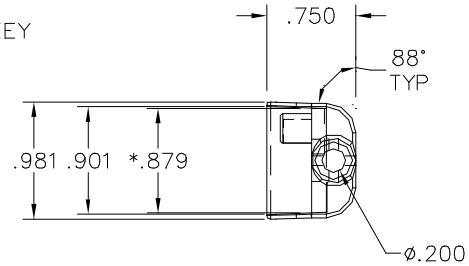

CABLE SPECIFICATIONS:

COMPONENT: (2) 18 AWG CONDUCTORS
65/36 TC STRANDING
INSULATOR: TEFLON
COLOR: RED AND BLACK

COMPONENT: (3) 24 AWG CONDUCTORS
41/40 TC STRANDING
INSULATOR: TEFLON
COLOR: WHITE, GREEN, AND BROWN

INSULATOR: .014 THICK PU TO ø.200
COLOR: BLACK

WIRE LIST	
FROM	COLOR
P1	RED 18 AWG
P2	WHITE 24 AWG
P3	GREEN 24 AWG
P4	BROWN 24 AWG
P5	BLACK 18 AWG

NOTES:

1. ** INDICATES DIMENSION IS AT CONNECTOR SURFACE*
2. *AMP CONNECTOR P/N 5787446-1*
3. *OVER MOLD MATERIAL: PU*
   COLOR: BLACK TO MATCH CABLE
4. *TEST CONTINUITY AND HIPOT TO 100 VOLTS DC*

BILL OF MAT'L. | NEXT ASSEMBLY

LOC	REV	APPR	DATE	EWO/ECN NO.
NBF	5		8/10/07	CHG DIM FROM .293 TO .305 FO AS BUILT SAMPLES
NBF	4		7/6/07	ADD CONNECTOR KEY FEATURES AND DIM'S
NBF	3		5/31/07	ITEM 5787446-1 WAS 5787444-1
NBF	6		9/27/07	CHG WIRES FROM .015 THK PU TO 18AWG TEFLON

REVISIONS

UNLESS OTHERWISE SPECIFIED:
1. ALL MACHINED SURFACES TO BE 63 MICROINCHES OR SMOOTHER.
2. ALL DIMENSIONS ARE IN INCHES.

TOLERANCES:
.XX ±.02 | FRACTIONS ± 1/64
.XXX ±.005 | ANGLE ±1/4°
.XXXX ±.0005

INSPIRED ENERGY®
SOLUTIONS FOR PORTABLE POWER
NEWBERRY, FLORIDA

3rd ANGLE PROJ.
DRAWN M. ORLER
DATE 4/4/07
CHECK
APPROVE
DATE ISSUED
PART DESC.: CONNECTOR 5 WIRE 204X
ADDITIONAL TEXT:
MACHINE NAME:

These documents, submitted by Inspired Energy Inc., contain information of a proprietary nature and shall not be copied or duplicated in whole or in part or used in whole or in part for any purpose other than that which is necessary for the preparation of bids or fabrication.

SCALE 1:1 | SHEET 1 OF 1
ENGINEERING NO. 629028
DWG. B SIZE | REV. 6
10/10/2002